HULTDINS SuperGrip™

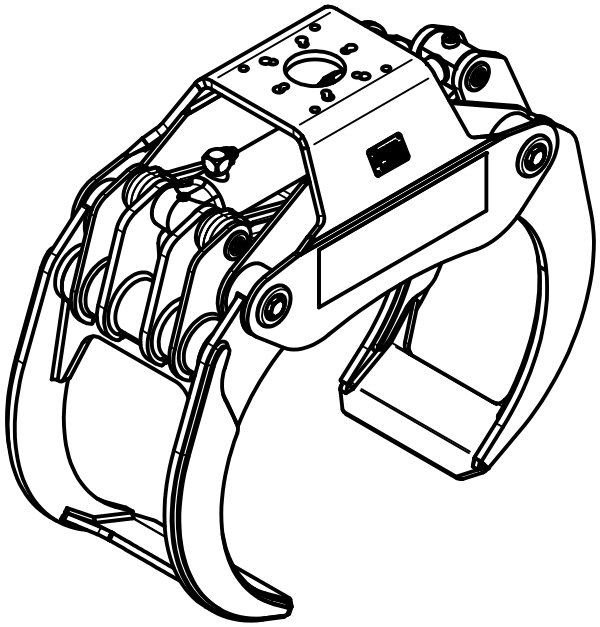

HULTDINS

SuperGrip 360RS

Spare Parts manual

0680390

S/N 027-18277 & up

2018-05-17
Rev. 00
Doc.Nr. 7680390-EN
Utg. 01-18
English

SuperGrip 360RS

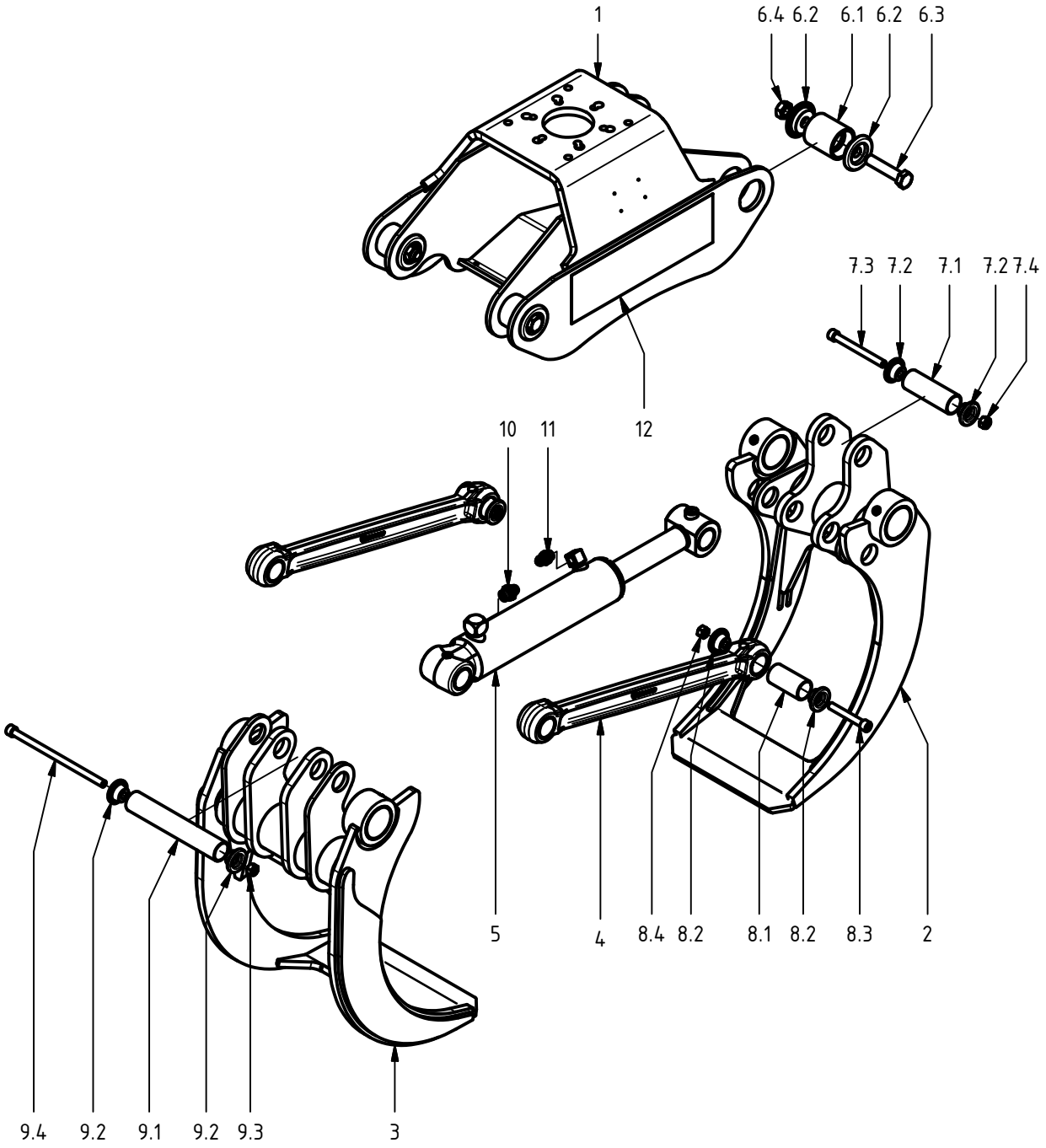

Item	Qty.	Part Number	Description	Notes
1	1	0680387	Frame asm.	incl. item #12
2	1	0680391	Grapple arm, male	
3	1	0680394	Grapplearm, female	
4	2	0680930	Rod asm.	
5	1	0150082	Hydraulic cylinder ø90/56	
6	4	0680540	Pin joint ø80 x 90 asm.	
6.1	1	0680521	Pin	ø80 x 090
6.2	2	0683021	Washer ø80	
6.3	1	0104634	Hex hd. cap screw	ISO 4014 - M24x110
6.4	1	0106033	Hex nut	ISO 4032 M24
7	1	0680541	Pin joint ø50 x 147 asm.	
7.1	1	0680077	Pin	ø50 x 147
7.2	2	0680054	Washer ø50	
7.3	1	0104132	Socket hd. cap screw	ISO 4762 - M16x160
7.4	1	0106030	Hex Nut	ISO 4032 M16
8	2	0680542	Pin joint ø50 x 99 asm.	
8.1	1	0680015	Pin	ø50 x 99
8.2	2	0680054	Washer ø50	
8.3	1	0104502	Socket hd. Cap Screw	ISO 4762 - M16x110
8.4	1	0106030	Hex Nut	ISO 4032 M16
9	1	0680545	Pin joint ø50 x 294 asm.	
9.1	1	0680075	Pin	ø50 x 294
9.2	2	0680054	Washer ø50	
9.3	1	0106030	Hex Nut	ISO 4032 M16
9.4	1	0104115	Socket hd. Cap Screw	ISO 4762 - M16x300
10	1	0130061	Adapter str.	SJG 1412
11	1	0130107	Adapter str.	SJG 1408
12	2	0146135	Label	

Hydraulic cylinder ø90/56

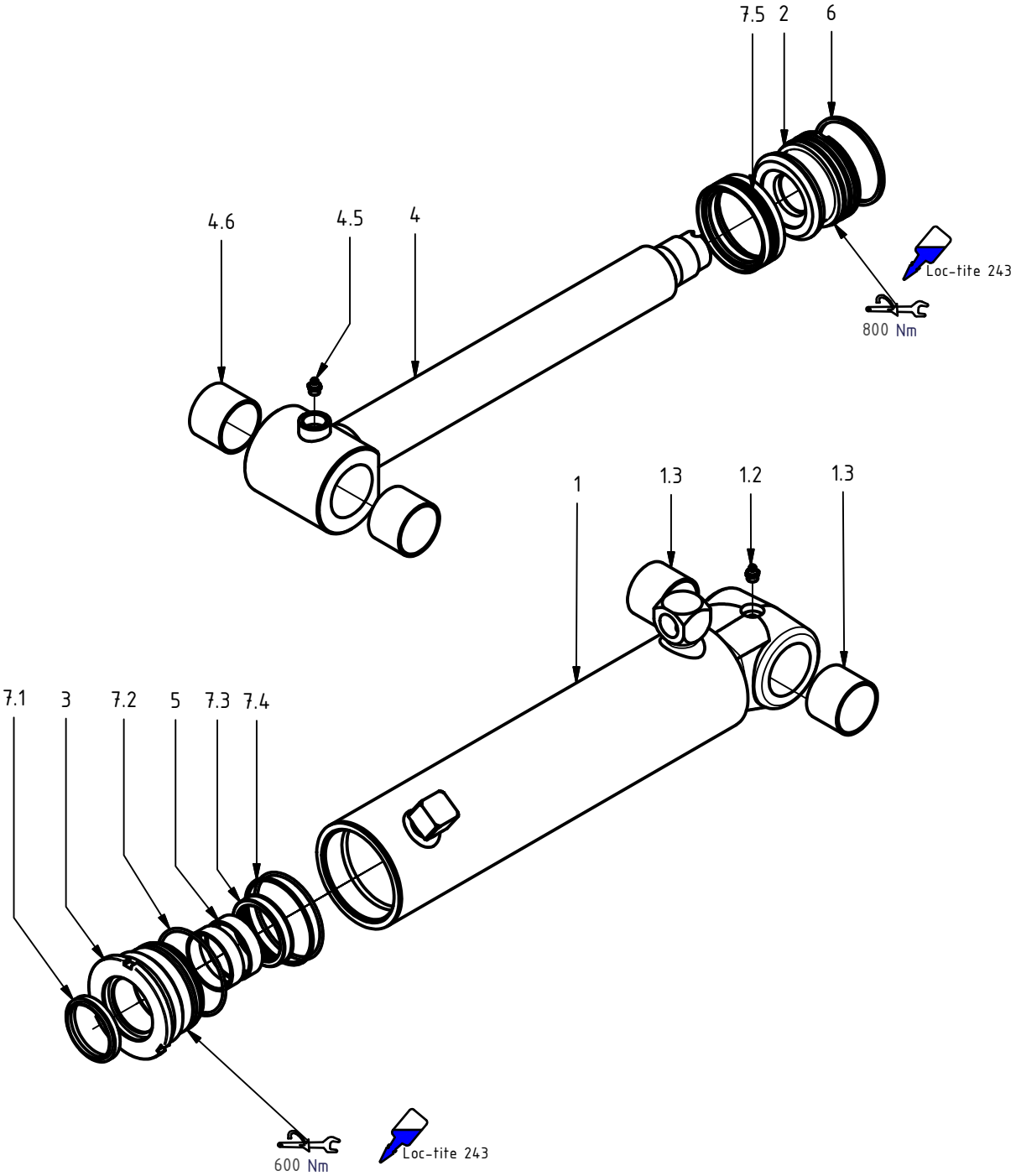

Item	Qty.	Part Number	Description	Notes
1	1	0150604	Barrel asm.	incl. item #1.3-1.3
1.2	1	0114023	Grease Fitting	M10 x 1
1.3	2	0124044	Bearing	ø50/55 x 40 WB
2	1	0150506	Piston	90/56
3	1	0150507	Gland	90/56
4	1	0150605	Rod asm.	incl. item #4.2-4.3
4.5	1	0114023	Grease Fitting	M10 x 1
4.6	2	0124044	Bearing	ø50/55 x 40 WB
5	2	0150525	Guide Ring	61/56 x 15-PF
6	1	0150528	Piston Ring	90 S
7	1	0121077	Seal kit 90/56	
7.1	1	-	Dust Seal	PA 56/66 x 7 x 10
7.2	2	-	O-ring	84,5 x 3,0
7.3	1	-	Rod Seal	SI/L 56/71 x 12,5
7.4	1	-	Backup Ring	85/90 x 1,3
7.5	1	-	Piston Seal	M/R-PF 90/75 x 20

Grapple arm, male

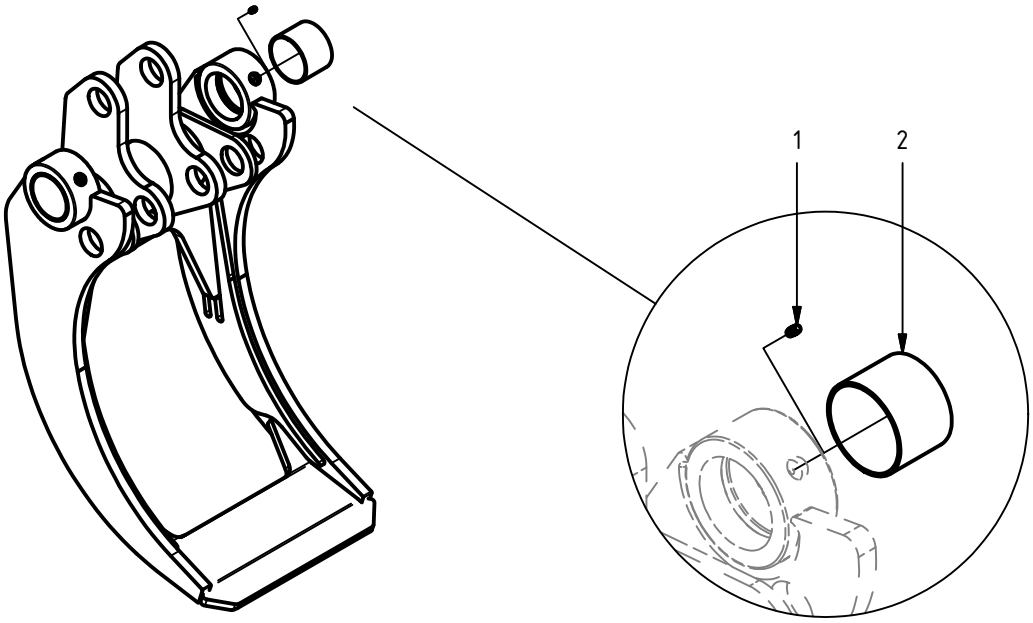

Item	Qty.	Part Number	Description	Notes
1	2	0114004	Grease Fitting	M6x1
2	2	0124066	Bearing	ø80/85 x 60

Grapplearm, female

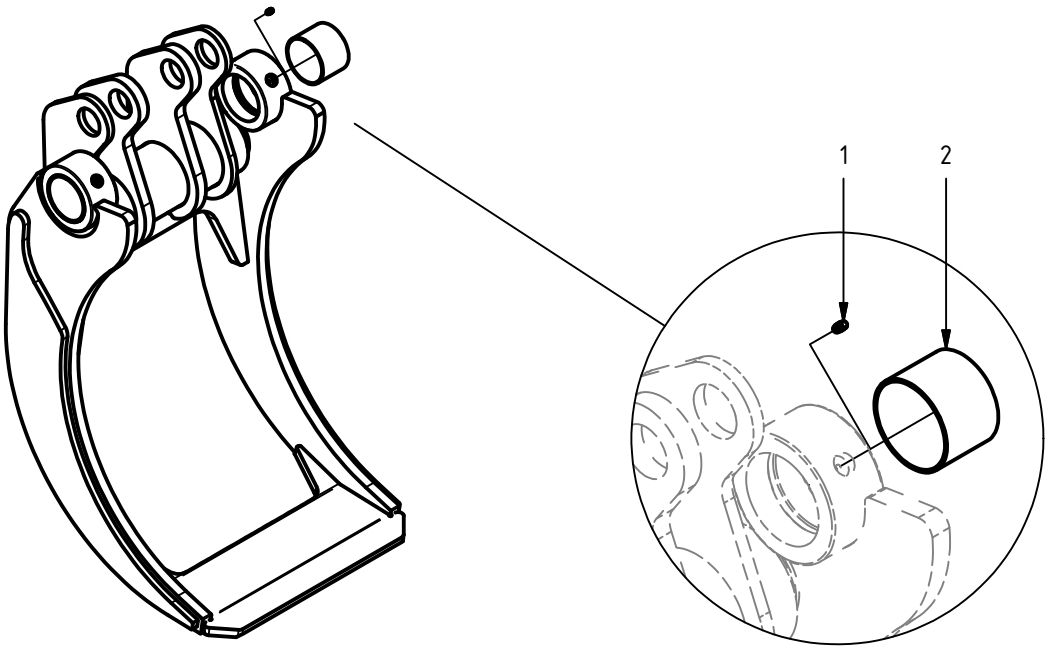

Item	Qty.	Part Number	Description	Notes
1	2	0114004	Grease Fitting	M6x1
2	2	0124066	Bearing	ø80/85 x 60

Rod asm.

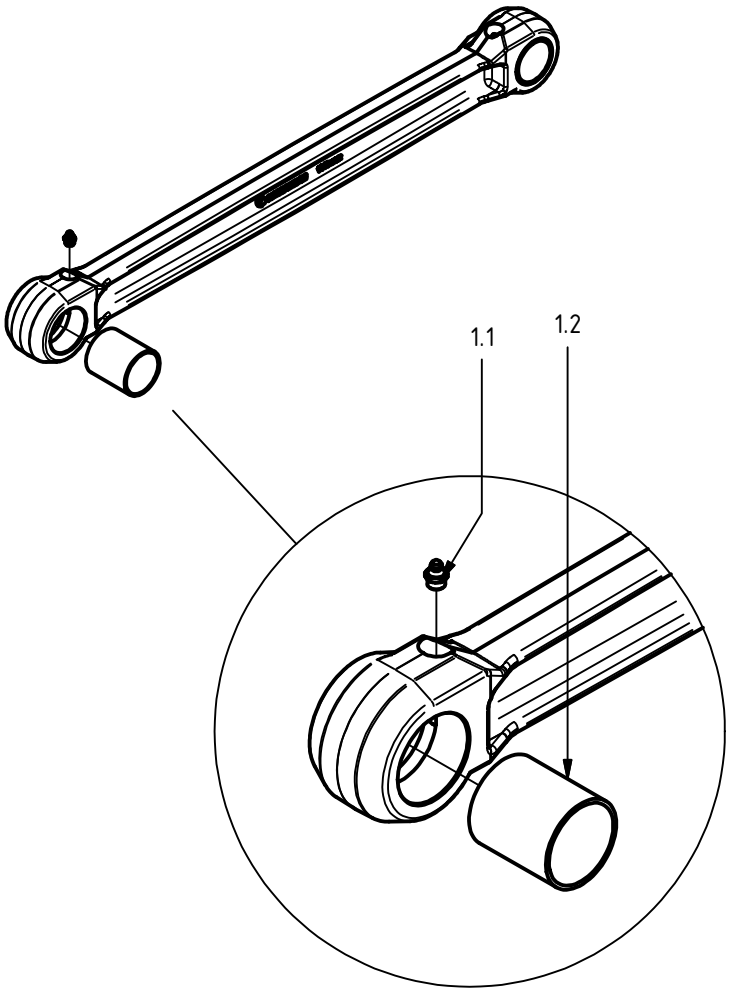

Item	Qty.	Part Number	Description	Notes
1.1	2	0114023	Grease Fitting	M10 x 1
1.2	2	0124089	Bearing	ø50/55 x 60 WB

HULTDINS SuperGrip™

Hultdin System AB
Skolgatan 12, SE-930 70 MALÅ, Sweden
tel. +46 953 418 00, fax +46 953 418 01
E-mail: sales@hultdins.se

English

Hultdins Inc.
22 Morton Avenue East
Brantford, Ontario, Canada N3R 7J7
tel (519) 754-0044, fax (519) 754-1569
E-mail: info@hultdins.com